Buckman Direct Diversion Project

A joint regional project of the City of Santa Fe and Santa Fe County to build a reliable and sustainable water supply.

MEMORANDUM

Date: October 22, 2012

To: Buckman Direct Diversion Board

From: Rick Carpenter, BDD Project Manager RC
Erika Schwender, Acting BDD Facility Manager

Subject: Request for Approval of a Professional Services Contract in the Amount of $ 63,887.60 (Exclusive of NMGRT) with Alonzo Gallegos to Erect New Fencing and Livestock Watering Facilities as Part of the Overall Work Being Performed by the BDD Project as Related to it's Required Habitat Restoration and Mitigation Plan

---

BACKGROUND

The BDD Project is required to perform certain environmental mitigation measures pursuant to the Project's NEPA Environmental Impact Statement. A large part of these prescribed mitigation efforts will be to restore and improve sensitive riparian and upland habitats, that will involve costly removal on non-native tree and shrub species and replacement of native trees, shrubs, and understory plants and grasses. However, the installation of new native plant species will be at risk for up to 10 years until the plants become established and self-sufficient. One specific risk will be the potential destruction of the new plants by grazing and foraging cattle as they make their way down to the Rio Grande to access drinking water. Therefore the cattle must be fenced out of the sensitive at-risk restoration areas, but as a result, the cattle will require a new source of water to replace water from the river.

The work that is required will be to erect a specialized and unique set of fences and a new livestock watering tank and ancillary facilities. This must be connected to the City's Buckman Well Number 4, and integrated into the existing system of fence lines and livestock watering system in order to render the required functionality.

Therefore, the contractor shall:

1. Construct a four-strand barbed wire fence approximately 10,300 feet long between certain sections of BLM and USFS lands, in the vicinity of City of Santa Fe, Buckman Well Number 4, along the approximate alignment of the existing fence. The new fence will be constructed in accordance with USFS specifications (see attached). The existing fence shall be removed by the contractor, as it is old and dilapidated and no longer functional.

2. Construct approximately 1,150 linear feet of a 3-rail 7/8" thick sucker rod pipe fence with 2 3/8" thick pipe posts in concrete every 10 feet, and built to USFS specifications (to be provided by USFS).

3. Install a 35-foot-wide, 8-foot-tall, round open steel ring water storage tank. Tank will be set in concrete slab on grade pad. The tank will be approximately 50,000 gallons in capacity.

4. Install approximately 350 feet of 3-inch PVC pipe buried in cut and fill trench approximately 3 feet deep. Install related 8-foot round water trough (for cattle and wildlife) set in concrete slab on grade pad. Trough will be installed with all necessary plumbing accessories (e.g., valve, float, etc), and made ready for connection to City of Santa Fe, Buckman Well Number 4.

RECOMMENDATION

Staff recommends approval of this contract in the amount of $63,887.60 (excluding NMGRT).

BUCKMAN DIRECT DIVERSION BOARD

CONSTRUCTION AGREEMENT

THIS AGREEMENT is made and entered into by and between the BUCKMAN DIRECT DIVERSION BOARD (the "BDDB") and Alonzo S. Gallegos (the "Contractor"). The date of this Agreement shall be the date when it is executed by the BDDB.

1. SCOPE OF SERVICES

The Contractor shall provide the following services for the BDDB:

A. The BDD Project is required to perform certain environmental mitigation measures pursuant to the Project's NEPA Environmental Impact Statement. A large part of these prescribed mitigation efforts will be to restore and improve sensitive riparian and upland habitats, that will involve costly removal of non-native tree and shrub species and replacement with native trees, shrubs, and understory plants and grasses. However, the installation of new native plant species will be at risk for up to 10 years until the plants become established and self-sufficient. One specific risk will be the potential destruction of the new plants by grazing and foraging cattle on the site pursuant to existing grazing leases, as they make their way down to the Rio Grande to access drinking water. Therefore the cattle must be fenced out of the sensitive at-risk restoration areas, but as a result, the cattle will require a new source of water to replace water from the river.

The work that is required will be to erect a specialized and unique set of fences and a new livestock watering tank and ancillary facilities. This must be connected to the City's Buckman Well Number 4, and integrated into the existing

system of fence lines and the livestock watering system in order to render the required functionality.

The Contractor shall provide all materials and shall:

1. Construct a four-strand barbed wire fence approximately 10,300 feet long between certain sections of BLM and USFS lands, in the vicinity of City of Santa Fe, Buckman Well Number 4, along the approximate alignment of the existing fence. The new fence will be constructed in accordance with USFS specifications (see attached). The existing fence shall be removed by the contractor, as it is old and dilapidated and no longer functional.
2. Construct approximately 1,150 linear feet of a 3-rail 7/8" thick sucker rod pipe fence with 2 3/8" thick pipe posts in concrete every 10 feet, and built to USFS specifications (to be provided by USFS).
3. Install a 35-foot-wide, 8-foot-tall, round open steel ring water storage tank. Tank will be set in concrete slab on grade pad. The tank will be approximately 50,000 gallons in capacity.
4. Install approximately 350 feet of 3-inch PVC pipe buried in cut and fill trench approximately 3 feet deep. Install related 8-foot round water trough (for cattle and wildlife) set in concrete slab on grade pad. Trough will be installed with all necessary plumbing accessories (e.g., valve, float, etc), and made ready for connection to City of Santa Fe, Buckman Well Number 4.

The Contractor will not be responsible for maintaining and repairing the new fence. The Contractor shall make all reasonable and prudent efforts to limit disturbance to the natural environment during staging and construction activities, and shall clean-up the construction area when complete.

2. <u>STANDARD OF PERFORMANCE; LICENSES</u>

A. The Contractor represents that it possesses the experience and knowledge necessary to perform the services described under this Agreement.

B. The Contractor agrees to obtain and maintain throughout the term of this Agreement, all applicable professional and business licenses required by law, for itself, its employees, agents, representatives and subcontractors.

3. COMPENSATION

A. The BDDB shall pay to the Contractor in full payment for services Rendered to include all materials and equipment, a sum not to exceed sixty three thousand eight hundred eighty seven dollars and sixty cents ($63,887.60), plus applicable gross receipts taxes.

B. The Contractor shall be responsible for payment of gross receipts taxes levied by the State of New Mexico on the sums paid under this Agreement.

C. Payment shall be made upon receipt and approval by the BDDB of detailed statements containing a report of services completed. Compensation shall be paid only for services actually performed.

4. APPROPRIATIONS

The terms of this Agreement are contingent upon sufficient appropriations and authorization being made by the BDDB for the performance of this Agreement. If sufficient appropriations and authorization are not made by the BDDB, this Agreement shall terminate upon written notice being given by the BDDB to the Contractor. The BDDB's decision as to whether sufficient appropriations are available shall be accepted by the Contractor and shall be final.

5. TERM AND EFFECTIVE DATE

This Agreement shall be effective when signed by the BDDB and terminate on June 30, 2013, unless sooner pursuant to Article 6 below.

6. TERMINATION

A. This Agreement may be terminated by the BDDB upon 30 days written notice to the Contractor.

(1) The Contractor shall render a final report of the services performed up to the date of termination and shall turn over to the BDDB original copies of all work product, research or papers prepared under this Agreement.

(2) If compensation is not based upon hourly rates for services rendered, the BDDB shall pay the Contractor for the reasonable value of services satisfactorily performed through the date Contractor receives notice of such termination, and for which compensation has not already been paid.

(3) If compensation is based upon hourly rates and expenses, then Contractor shall be paid for services rendered and expenses incurred through the date Contractor receives notice of such termination.

7. STATUS OF CONTRACTOR; RESPONSIBILITY FOR PAYMENT OF EMPLOYEES AND SUBCONTRACTORS

A. The Contractor and its agents and employees are independent contractors performing professional services for the BDDB and are not employees of the BDDB. The Contractor, and its agents and employees, shall not accrue leave, retirement, insurance, bonding, use of BDDB vehicles, or any other benefits afforded to employees of the BDDB as a result of this Agreement.

B. Contractor shall be solely responsible for payment of wages, salaries and benefits to any and all employees or subcontractors retained by Contractor in the performance of the services under this Agreement.

8. CONFIDENTIALITY

Any confidential information provided to or developed by the Contractor in the performance of this Agreement shall be kept confidential and shall not be made

available to any individual or organization by the Contractor without the prior written approval of the BDDB.

9. CONFLICT OF INTEREST

The Contractor warrants that it presently has no interest and shall not acquire any interest, direct or indirect, which would conflict in any manner or degree with the performance of services required under this Agreement. Contractor further agrees that in the performance of this Agreement no persons having any such interests shall be employed.

10. ASSIGNMENT; SUBCONTRACTING

The Contractor shall not assign or transfer any rights, privileges, obligations or other interest under this Agreement, including any claims for money due, without the prior written consent of the BDDB. The Contractor shall not subcontract any portion of the services to be performed under this Agreement without the prior written approval of the BDDB.

11. RELEASE

The Contractor, upon acceptance of final payment of the amount due under this Agreement, releases the BDDB, its officers and employees, from all liabilities, claims and obligations whatsoever arising from or under this Agreement. The Contractor agrees not to purport to bind the BDDB to any obligation not assumed herein by the BDDB unless the Contractor has express written authority to do so, and then only within the strict limits of that authority.

12. INDEMNIFICATION

A GENERAL INDEMNITY: To the greatest extent permitted by law, the Contractor shall indemnify, hold harmless and defend the Board, the City of Santa Fe, Santa Fe County, and their respective elected officials, officers, employees, agents, volunteers and representatives from all losses, damages, claims or judgments, including payments of all attorneys' fees and costs on account of any suit, judgment, execution, claim, action or demand whatsoever arising from the Contractor's performance or non-performance under this Agreement as well as the performance or non-performance of the Contractor's employees, agents, representatives and subcontractors or any tier.

B INDEMNIFICATION FOR PROFESSIONAL ACTS, ERRORS OR OMISSIONS: Except for Professional acts, errors or omissions that are the result of established gross negligence or willful or wanton conduct on the part of the Contractor or its employees, agents, representatives or sub consultants, the General Indemnification shall not apply to professional acts, errors or omission unless covered by any Professional Liability insurance required in this Agreement.

13. NEW MEXICO TORT CLAIMS ACT

Any liability incurred by the BUCKMAN DIRECT DIVERSION BOARD in connection with this Agreement is subject to the immunities and limitations of the New Mexico Tort Claims Act, Section 41-4-1, et. seq. NMSA 1978, as amended. The BDDB

and its "public employees" as defined in the New Mexico Tort Claims Act, do not waive sovereign immunity, do not waive any defense and do not waive any limitation of liability pursuant to law. No provision in this Agreement modifies or waives any provision of the New Mexico Tort Claims Act.

14. THIRD PARTY BENEFICIARIES

By entering into this Agreement, the parties do not intend to create any right, title or interest in or for the benefit of any person other than the BDDB and the Contractor. No person shall claim any right, title or interest under this Agreement or seek to enforce this Agreement as a third party beneficiary of this Agreement.

15. RECORDS, DOCUMENT CONTROL AND AUDIT

The Contractor shall conform with and participate in the Document Control policies of the Board or the City of Santa Fe. The Contractor shall maintain, throughout the term of this Agreement and for a period of three years thereafter, all records that relate to the scope of services provided under this Agreement.

Detailed records that indicate the date, time and nature of services rendered shall also be retained for a period of three years after the term of this agreement expires. These records shall be subject to inspection by the City of Santa Fe, the Department of Finance and Administration, the State Auditor. The Board and the City of Santa Fe shall have the right to audit the billing both before and after payment to the Contractor. Payment under this Agreement shall not foreclose the right of the Board or the City of Santa Fe to recover excessive or illegal payments.

16. APPLICABLE LAW; CHOICE OF LAW; VENUE

Contractor shall abide by all applicable federal and state laws and regulations, and all ordinances, rules and regulations of the BUCKMAN DIRECT DIVERSION BOARD. In any action, suit or legal dispute arising from this Agreement, the Contractor agrees that the laws of the State of New Mexico shall govern. The parties agree that any action or suit arising from this Agreement shall be commenced in a federal or state court of competent jurisdiction in New Mexico. Any action or suit commenced in the courts of the State of New Mexico shall be brought in the First Judicial District Court.

17. AMENDMENT

This Agreement shall not be altered, changed or modified except by an amendment in writing executed by the parties hereto.

18. SCOPE OF AGREEMENT

This Agreement incorporates all the agreements, covenants, and understandings between the parties hereto concerning the services to be performed hereunder, and all such agreements, covenants and understandings have been merged into this Agreement. This Agreement expresses the entire Agreement and understanding between the parties with respect to said services. No prior agreement or understanding, verbal or otherwise, of the parties or their agents shall be valid or enforceable unless embodied in this Agreement.

19. NON-DISCRIMINATION

During the term of this Agreement, Contractor shall not discriminate against any employee or applicant for an employment position to be used in the performance of services by Contractor hereunder, on the basis of ethnicity, race, age,

religion, creed, color, national origin, ancestry, sex, gender, sexual orientation, physical or mental disability, medical condition, or citizenship status.

20. SEVERABILITY

In case any one or more of the provisions contained in this Agreement or any application thereof shall be invalid, illegal or unenforceable in any respect, the validity, legality, and enforceability of the remaining provisions contained herein and any other application thereof shall not in any way be affected or impaired thereby.

21. NOTICES

Any notices required to be given under this Agreement shall be in writing and served by personal delivery or by mail, postage prepaid, to the parties at the following addresses:

BUCKMAN DIRECT DIVERSION BOARD:

Buckman Direct Diversion Project
341 Caja del Rio,
Santa Fe, New Mexico 87507
Attn: Rick Carpenter

Contractor:

Alonzo Gallegos
P.O. Box 1391
Pena Blanca, NM 87041

DRAFT

BUCKMAN DIRECT DIVERSION BOARD

By: _____
Chris Calvert

Chairperson
Date: _____

ATTEST:

_____
Valerie Espinoza, County Clerk

APPROVED AS TO FORM:

_____
Nancy R. Long, BDDB Counsel

APPROVED:

_____
City Finance Director

_____
Business Unit/Line Item

ATTEST:

_____
Yolanda Y. Vigil, City Clerk
File Date: _____

CONTRACTOR:
*

By: _____
Name: _____
Title: _____
Date: _____

NM Taxation & Revenue

DRAFT

CRS #*

City of Santa Fe Business
Registration #*

DRAFT

Buckman Direct Diversion Board
Summary of Contracts, Agreements, & Amendments

Section to be completed by department for each contract or contract amendment

1 **FOR:** ORIGINAL CONTRACT ☐ or CONTRACT AMENDMENT ☑

2 Name of Contractor Alonzo Gallegos PSA

3 Complete information requested ☑ Plus GRT ☐ Inclusive of GRT

Original Contract Amount: $63,887.60

Termination Date: _____

☑ Approved by BDDB Date: Pending

☐ or by Project Manager Date: _____

Contract is for: Fencing

Amendment # _____ to the Original Contract# _____

Increase/(Decrease) Amount $ _____

Extend Termination Date to: _____

☐ Approved by BDDB Date: _____

☐ or by Project Manager Date: _____

Amendment is for:

---

4 **History of Contract & Amendments:** (option: attach spreadsheet if multiple amendments) ☐ Plus GRT ☐ Inclusive of GRT

Amount $ _____ of original Contract# _____ Termination Date: _____

Reason: _____

Amount $ _____ amendment # _____ Termination Date: _____

Reason: _____

Amount $ _____ amendment # _____ Termination Date: _____

Reason: _____

Amount $ _____ amendment # _____ Termination Date: _____

Reason: _____

Total of Original Contract plus all amendments: $ _____

Buckman Direct Diversion Board
Summary of Contracts, Agreements, & Amendments

5 **Procurement Method of Original Contract:** (complete one of the lines)

RFP# _____ Date: _____

RFQ ☐ _____ Date: _____

Sole Source ☐ _____ Date: _____

Other _____

6 **Procurement History:** _____
example: (First year of 4 year contract)

7 **Funding Source:** _____ **BU/Line Item:** 7280000

8 **Any out-of-the ordinary or unusual issues or concerns:**
none
(Memo may be attached to explain detail.)

9 **Staff Contact who completed this form:** Maya Martinez

Phone # 955-4271

10 **Certificate of Insurance attached.** (if original Contract) ☐

Submit to City Attorney for review/signature
Forward to Finance Director for review/signature
Return to originating Department for Committee(s) review or forward to City Manager for review and approval (depending on dollar level).

To be recorded by City Clerk:

Contract # _____

Date of contract Executed (i.e., signed by all parties): _____

Note: If further information needs to be included, attach a separate memo.

Comments:

m

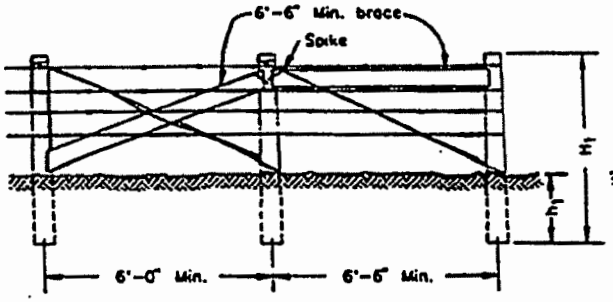

END PANEL—TYPE I

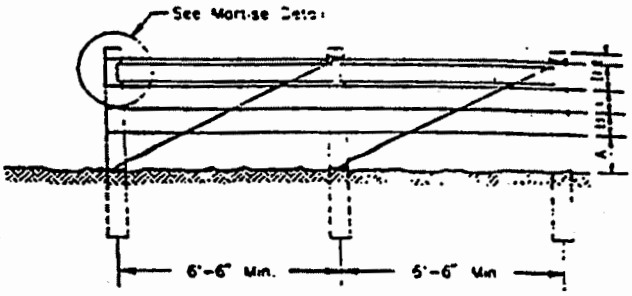

END PANEL—TYPE II

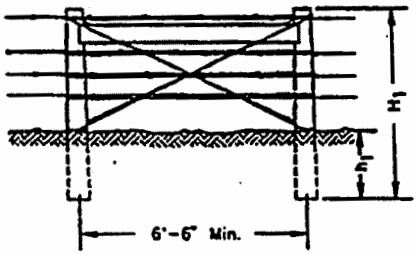

STRESS PANEL

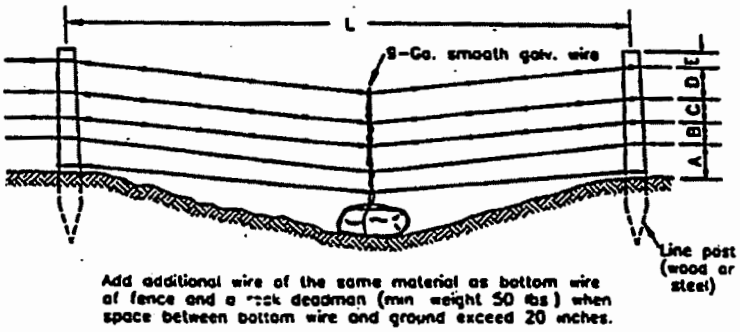

PANEL AT MINOR DEPRESSION

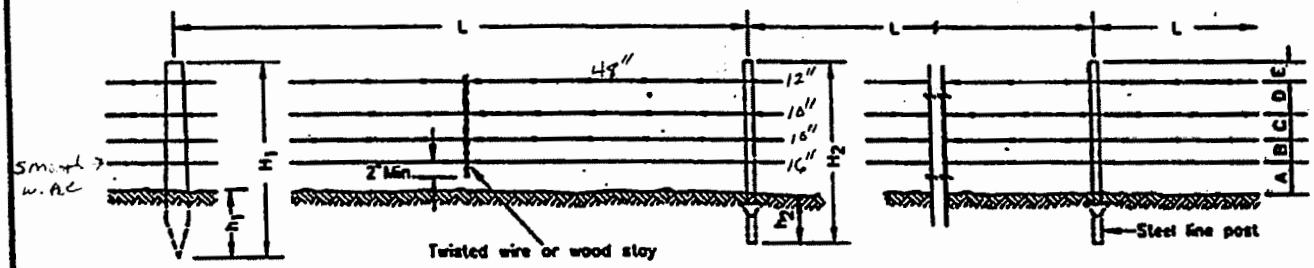

LINE PANELS

NOTE:

1. See specifications for the following:
   a. Ratio of steel to wood line posts.
   b. Post spacing, length and depth in ground.
   c. Type of end panel to be used.
   d. Type of wire to be used.
   e. Spacing between wires.
   f. Number of stays per span (L).

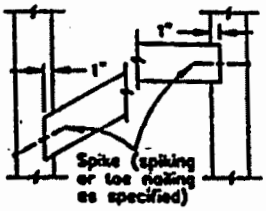

MORTISE DETAIL

UNITED STATES DEPARTMENT OF THE INTERIOR BUREAU OF LAND MANAGEMENT DIVISION OF TECHNICAL SERVICES SERVICE CE	
TYPICAL BARBED WIRE FENCE (4—WIRE)	
DESIGNED by others REVIEWED APPROVED	
DRAWN	SCALE NONE
DATE FEBRUARY 25, 1991	SHEET OF

PAGE 1

ALWAYS THINK SAFETY

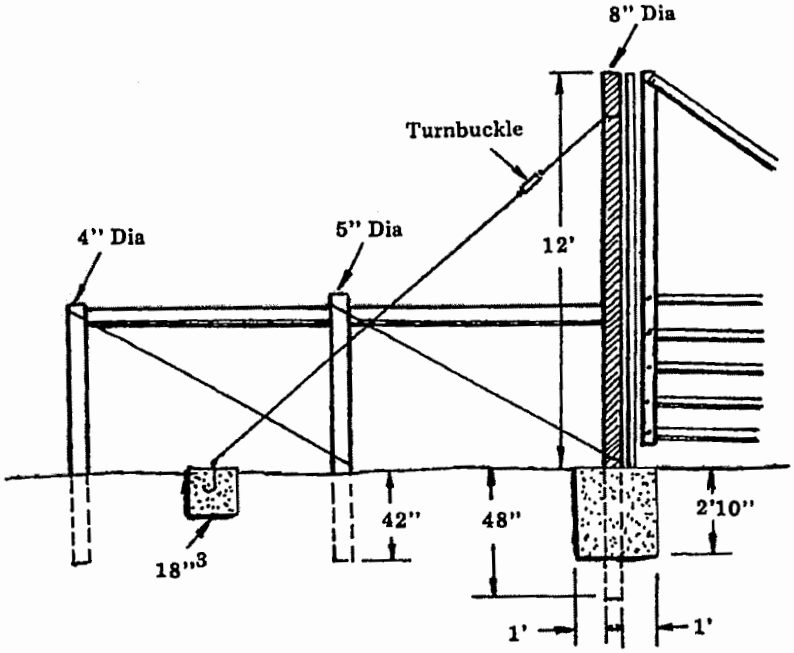

Double panel gate brace.

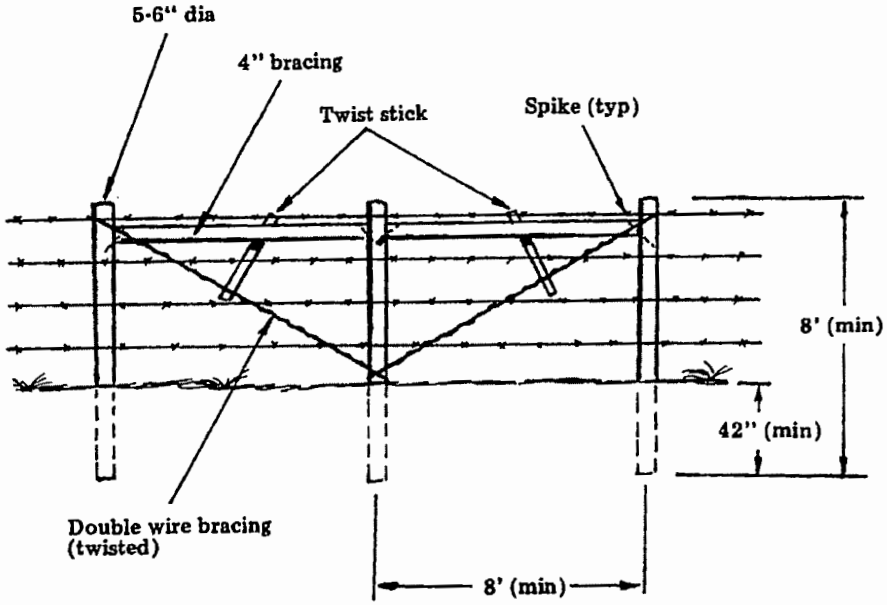

Three-post double panel brace.

PAGE 2

Brace Designs

Horizontal Braces

Horizontal braces are structurally sound and appropriate for most fences. They are the most common brace constructed.

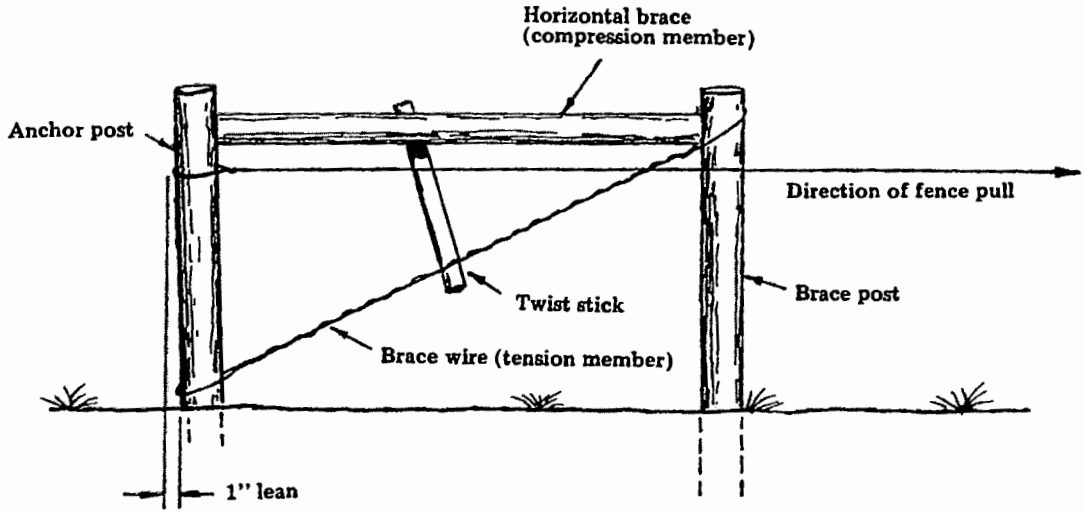

Parts of horizontal brace.

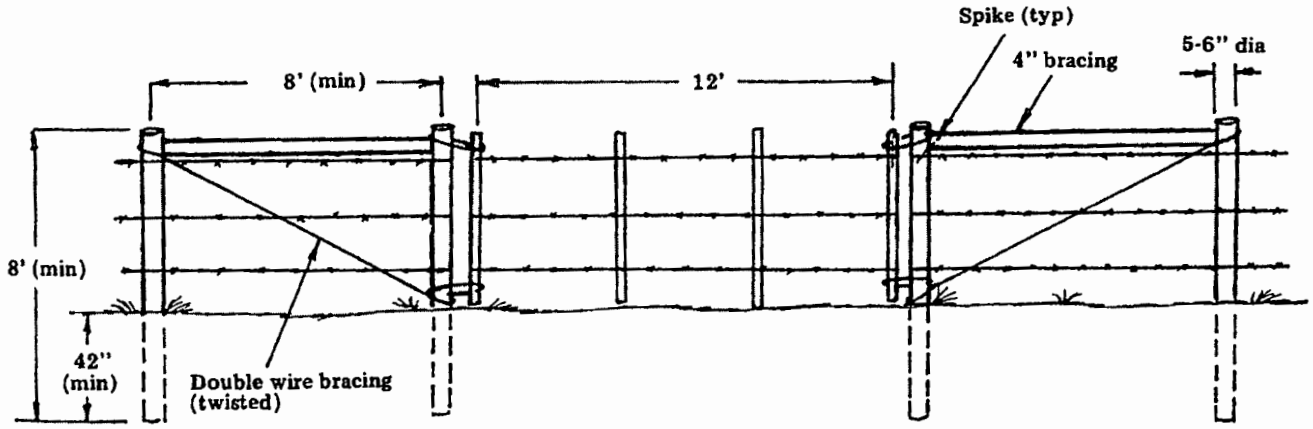

Single panel end and gate brace.

PAGE 3

WOVEN WIRE GATE:

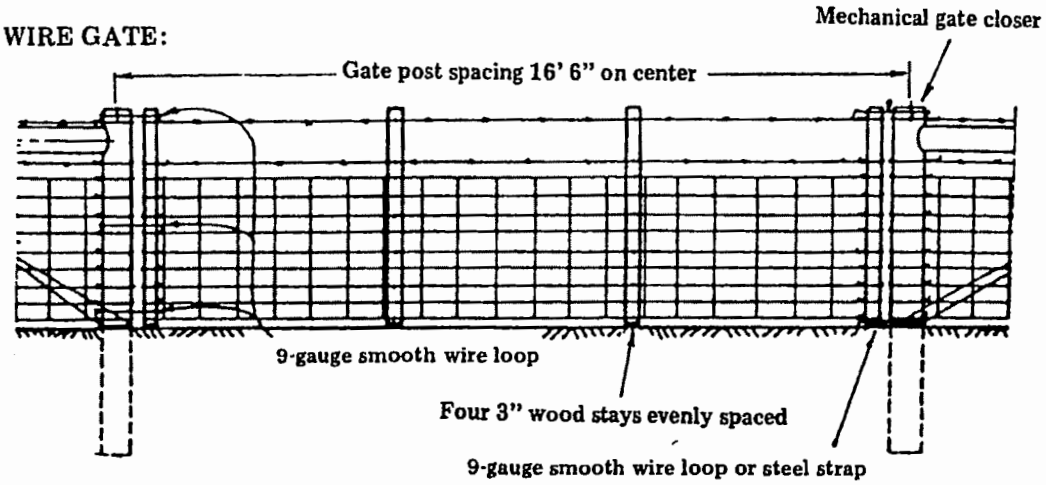

BARBED WIRE GATE:

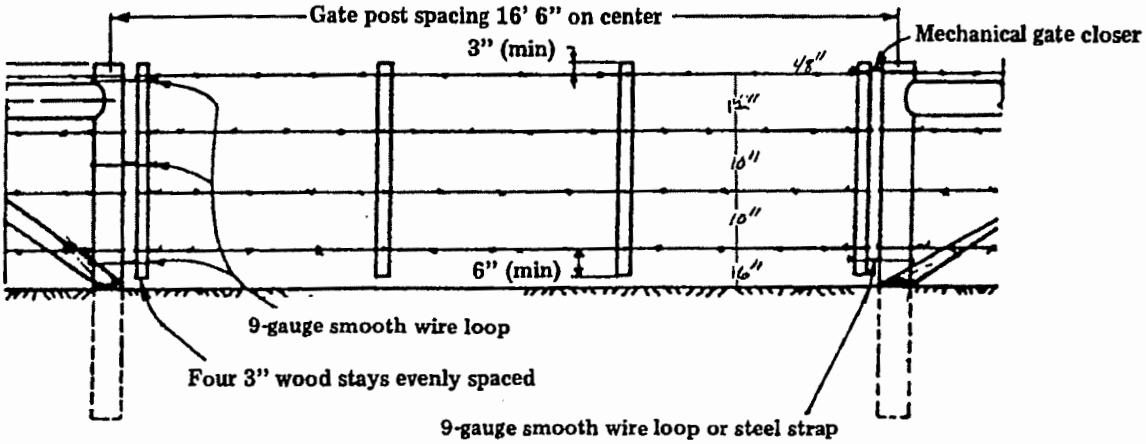

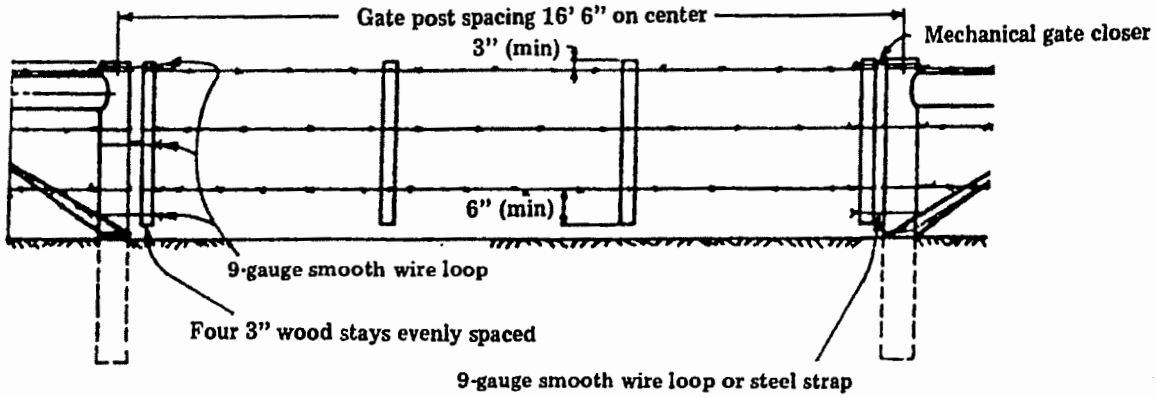

PAGE 4

WALK THROUGH GATE

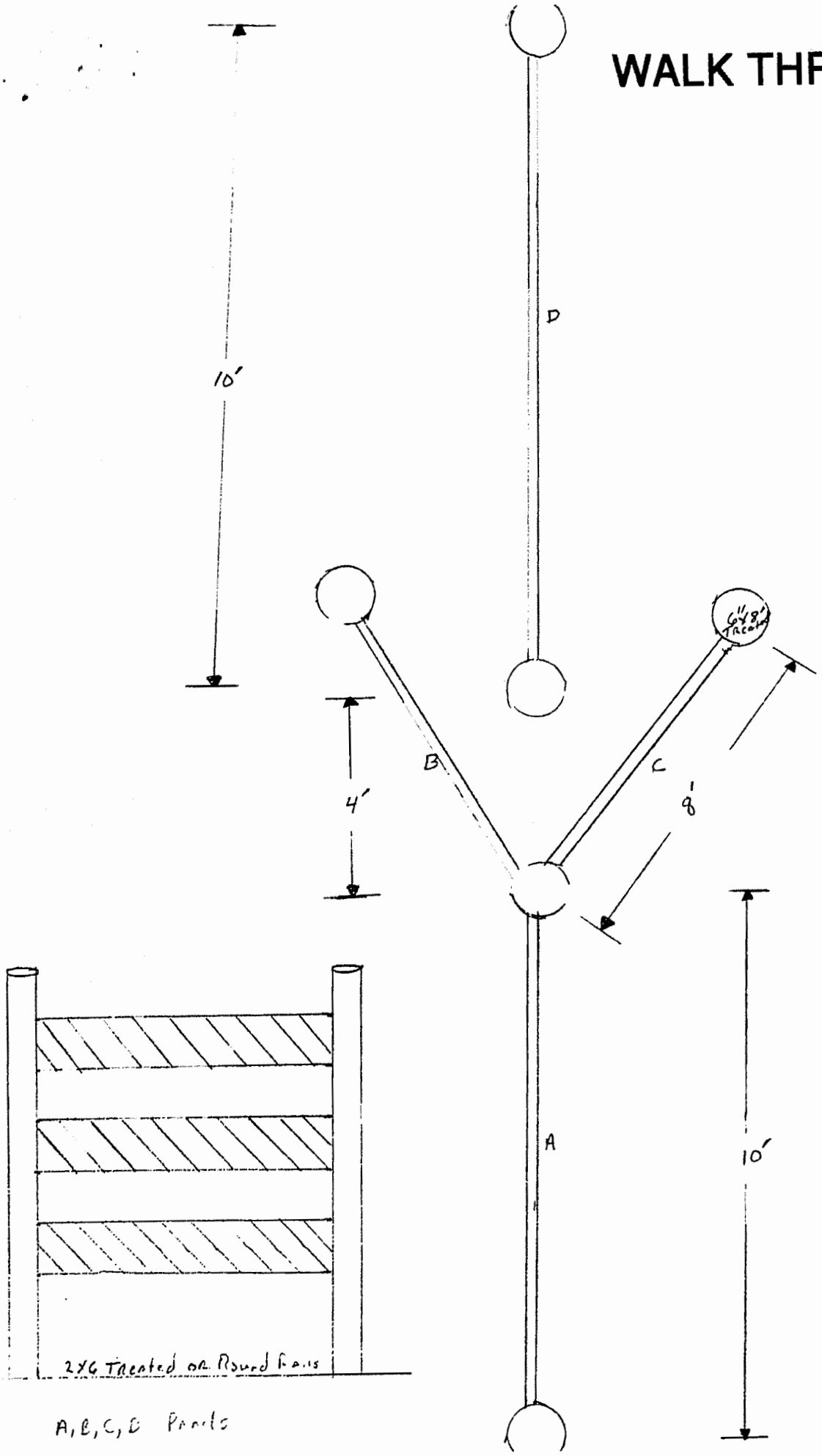

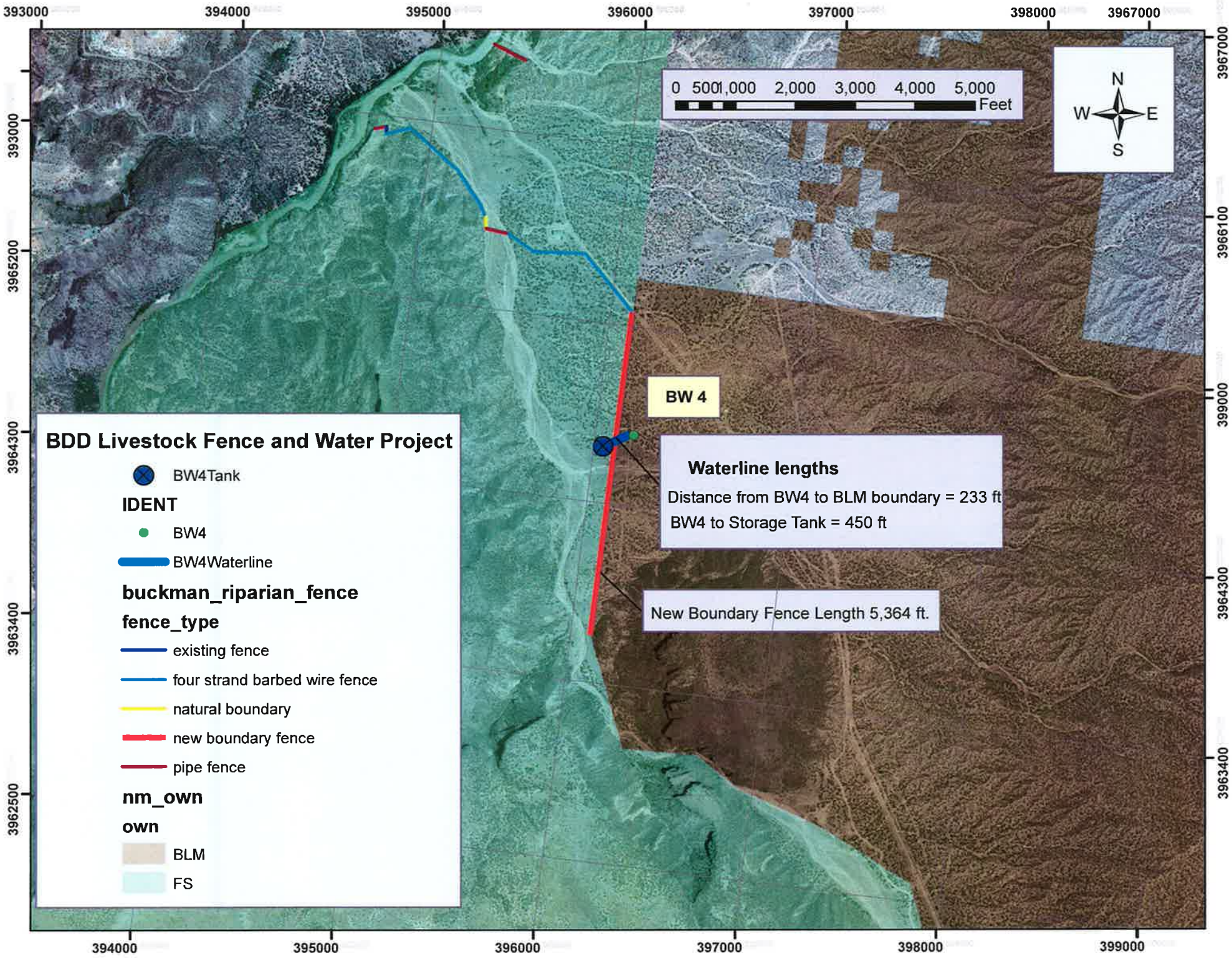
BDD Livestock Fence and Water Project
BW4Tank
IDENT
BW4
BW4Waterline
buckman_riparian_fence
fence_type
existing fence
four strand barbed wire fence
natural boundary
new boundary fence
pipe fence
nm_own
own
BLM
FS
0 500 1,000 2,000 3,000 4,000 5,000
Feet
N
W
E
S
BW 4
Waterline lengths
Distance from BW4 to BLM boundary = 233 ft
BW4 to Storage Tank = 450 ft
New Boundary Fence Length 5,364 ft.
393000
394000
395000
396000
397000
398000
3967000
3966100
399000
3964300
3963400
3965200
3962500
394000
395000
396000
397000
398000
399000